VFTCam phone panohead: assembly

Hardware: one 1/4"-20 hex nut

1. Press the 1/4"-20 nut into the hex pocket under the base.



2. Set the turntable on the base, fingers down. Push a clip into the post groove.

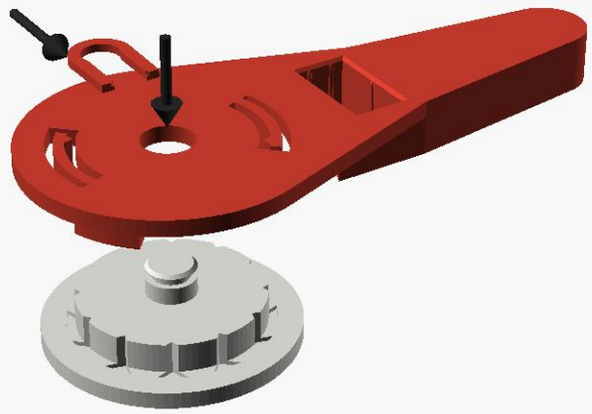

3. Push the arm's foot into the turntable's socket until the collar sits flat on the turntable. It is a tight fit.

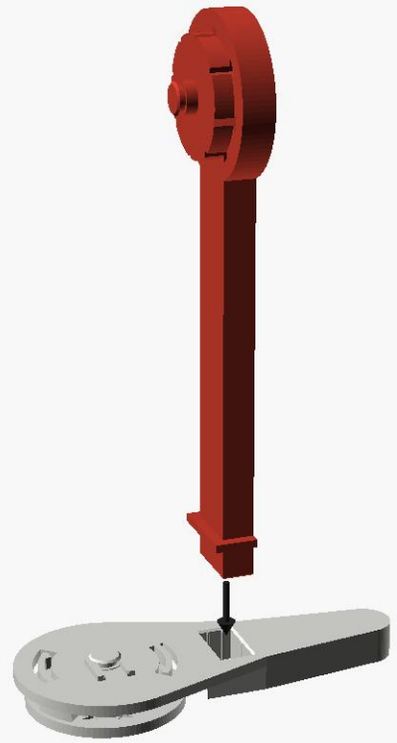

4. Put the tilt hub on the arm's post, fingers toward the arm. Clip it on.

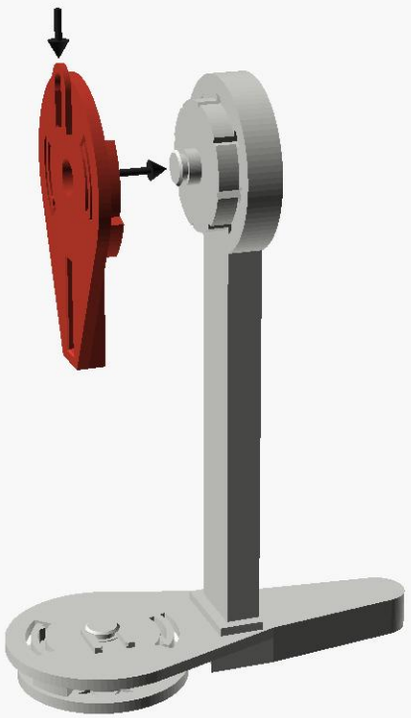

5. Push the cradle's tongue firmly into the hub's slot. A drop of super glue first makes it permanent: print a hub and cradle for each phone.

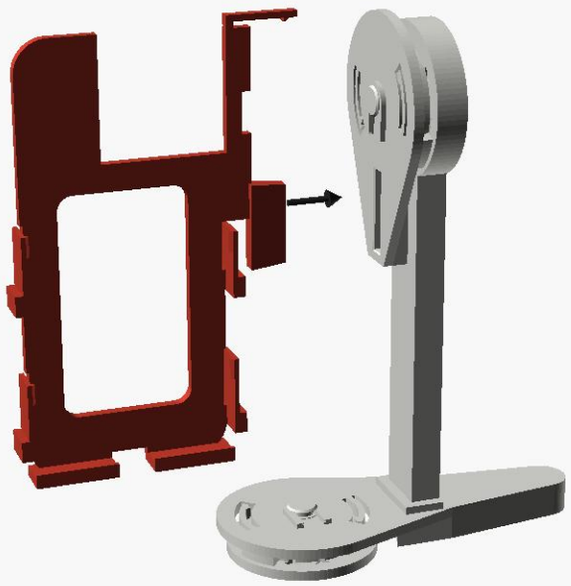

6. Screen out, cameras at the top right. Tuck the bottom under the ledge lip, then press the phone in until the four side clips click.

